

FAZ WOOD HIGH TABLE 50x50x105

By Ramon Esteve

With a warmer, more cheerful, and original design, Vondom adds wood finishes to the legs of the classics Faz chair and bar stool. As well as the bases of the table in its three types. A reinterpretation that reinforces the inspiration of the collection based on minerals and their role in nature. The result is pieces imbued with a spirit of casual luxury, without departing from the ergonomic and elegant architectural forms of the rest of the collection.

Pieces that suit interior areas like lounges, dining rooms and much more. Available in variety of colours.

Faz, a collection that continues to grow, and is taking Vondom's design to a new territory.
View online: https://www.vondom.com/products/54315

Features

Weight

9.74 Kg

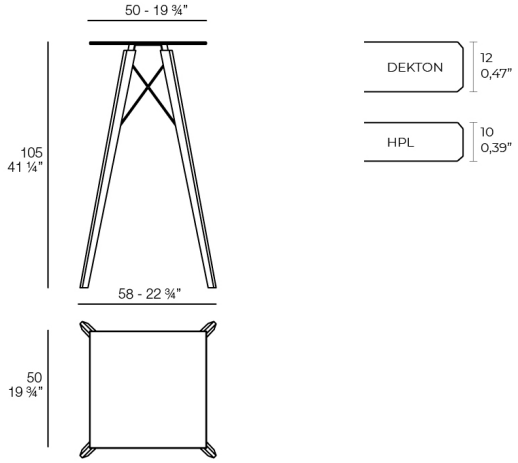

FAZ WOOD Mesa Alta 50 x 50
FAZ WOOD Dinning table 19 ¾ x 19 ¾"

Finishes

HPL WHITE

Ref. 54315B

DEKTON

Ref. 54315M

Wooden base with ceramic surface

COLOR	HPL	HPL WHITE	DEKTON
ENTZO	☐	☐	☐
KELYA	☐	☐	■
DANAE	☐	☐	■
WHITE	☐	☐	☐
BLACK	■	☐	☐

