VONDOM

Products / Sofas / Milos Modular Sofa

Milos chaselongue

by Jean-Marie Massaud

The Milos collection is the fruit of **Vondom's first collaboration with French designer Jean-Marie Massaud**. An example of how simplicity and functionality can be combined to create an elegant and comfortable outdoor furniture collection. Characterised by soft curves, this collection focuses on comfort.
A collection that won the Red Dot Design Award 2024.



VONDOM

Info

Description

This modular sofa combines the durability of flexible polyurethane foam with the natural beauty of iroko wood.

Its design integrates top-quality solutions and materials, especially conceived to withstand outdoor conditions without compromising warmth and comfort.

Weight: 20.1 Kg

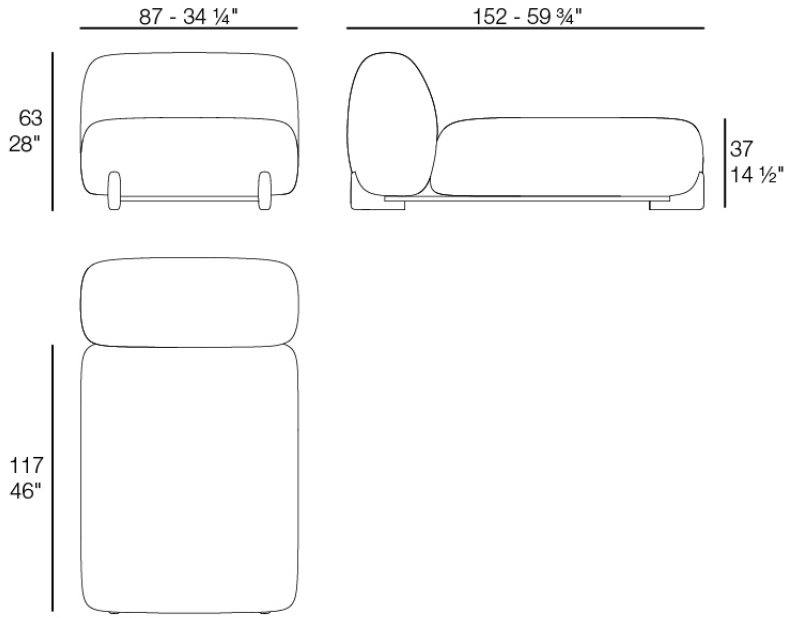

MILOS Sofá Chaise Lounge
MILOS Sectional Chaise Lounge
Ref. 70011

Combinations

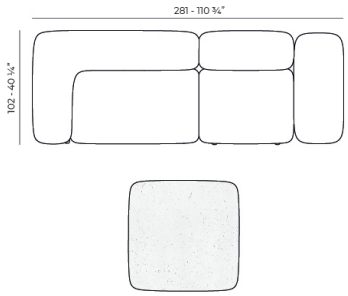

1 x 70002 Sofá Brazo Derecho XL - Sectional Sofa Right XL
1 x 70007 Sofá Módulo Central S - Sectional Sofa Armless S
1 x 70017 Mesa Centro 100 x 45 - Low Table 39 ¼ x 17 ¾"
1 x 70019 Mesa Centro 80 x 80 - Low Table 31 ½ x 31 ½"

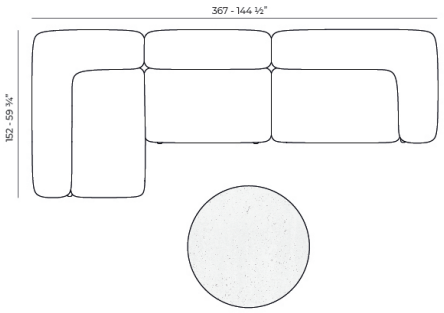

2 x 70003 Sofá Brazo Izquierdo XL - Sectional Sofa Left XL
1 x 70004 Sofá Módulo Central M - Sectional Sofa Armless M
1 x 70015 Mesa Centro D110 - Low Table D 43 ¼"

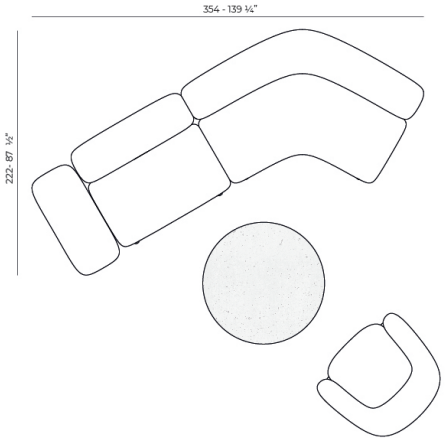

1 x 70004 Sofá Módulo Central M - Sectional Sofa Armless M
1 x 70009 Sofá Esquina 60º- Sectional Sofa Corner 60º
1 x 70026 Butaca Tapizada - Upholstered Armchair
1 x 70015 Mesa Centro D110 - Low Table D 43 ¼"

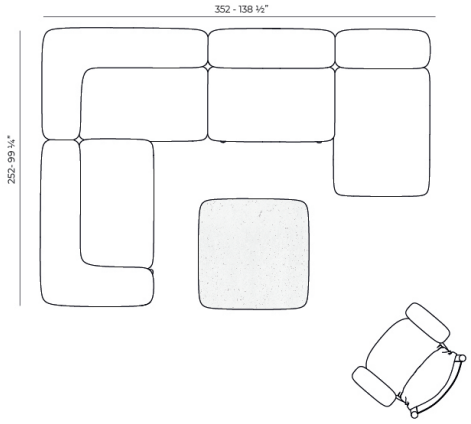

2 x 70002 Sofá Brazo Derecho XL - Sectional Sofa Right XL
1 x 70004 Sofá Módulo Central M - Sectional Sofa Armless M
1 x 70011 Sofá Chaise Lounge - Sectional Chaise Lounge
1 x 70001 Butaca Madera - Wood Armchair
1 x 70016 Mesa Centro 100 x 100 - Low Table 39 ¼ x 39 ¼"

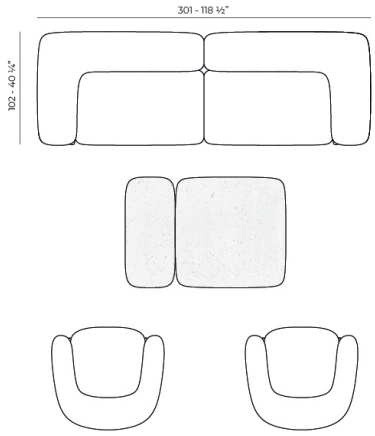

1 x 70002 Sofá Brazo Derecho XL - Sectional Sofa Right XL
1 x 70003 Sofá Brazo Izquierdo XL - Sectional Sofa Left XL
2 x 70026 Butaca Tapizada - Upholstered Armchair
1 x 70016 Mesa Centro 100 x 100 - Low Table 39 ¼ x 39 ¼"
1 x 70017 Mesa Centro 100 x 45 - Low Table 39 ¼ x 17 ¾"

VONDOM

Finishes

finishes

POLYURETHANE
Ref. 70011

Furniture made of flexible polyurethane injected cold. This material possesses a high resilience and durability.

fabric

GLAD
Ref. 70011CO


oro 1031


ocre 1051


sunset 1020


delhi 1038


lima 1030


aguacate 1028


caribe 1004


bosc 1029


artemisa 1027


oasis 1007


oceano 1005


pruna 1045


noa 1026


berry 1021


amatista 1011

VONDOM


vera 1019


afrodita 1013


grana 1046


bacco 1034


dahlia 1035


wine 1012


foc 1052

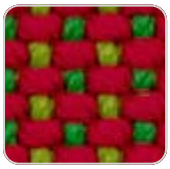
hestia 1014


turquoise 1053


niord 1015


masai 1018


ultramar 1002


aquamarina 1003


esmeralda 1016


night 1024


galan 1025


eclipse 1023


perla 1006


calipso 1017

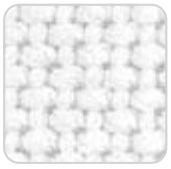
snow 1041

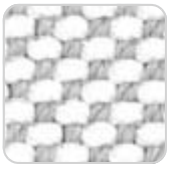
iceberg 1037


steel 1042


moon 1040


granito 1008


grey 1043


antrhacite 1044


ecru 1047

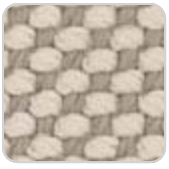
dessert 1033


taupe 1048


terra 1039


duna 1009


moka 1010


chocolate 1050

Soft and cozy fabric suitable for indoor and outdoor use.

VARM

VONDOM

Ref. 70011CO


green+crema 1064


blue jeans 1071


crema+blue 1063


tortora+crema 1070


crema+gray 1062


crema+ purjai red 1061


purjai red 1069


crema+modo green 1060


crema 1068


blue+crema 1067


black+crema 1066


purjai+crema 1065

Soft and cozy fabric suitable for indoor and outdoor use.

HYGGE
Ref. 70011CO


crema 1080


blue 1083


black 1082


gray 1081

Soft and cozy fabric suitable for indoor and outdoor use.

KROLLET
Ref. 70011CO











krollet blue notte 1925 krollet purjai 1924 krollet verde 1923 krollet crema 1922 krollet white 1921



krollet black 1926

Soft and cozy fabric suitable for indoor and outdoor use.

Ambients



