And 218x185x234

by Fabio Novembre

The And Collection outdoor design bench, by Fabio Novembre for Vondom, is a spatial concept. A volume that cuts through the air, creating emotional turbulence for those who get swept up in it.



VONDOM

Info

Description

Made of polyethylene resin by rotational moulding.100% Recyclable. Item suitable for indoor and outdoor use. Available in different finishes.

Weight: 87.22 Kg

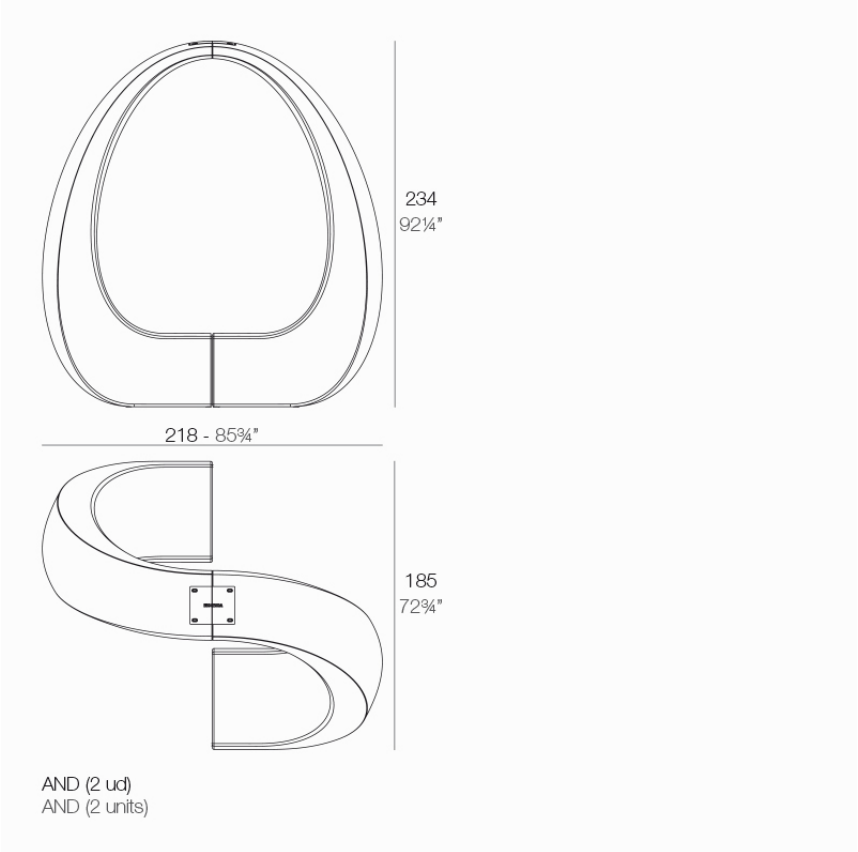

Combinations

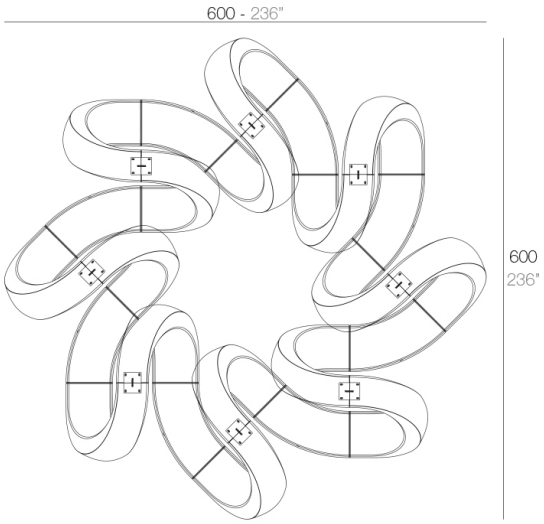

8 x 60007 AND - AND
8 x 60006 AND Banco - AND Bench

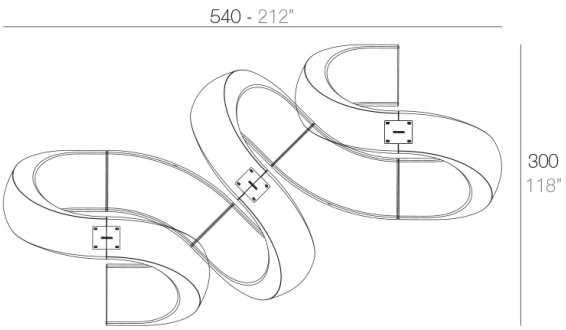

3 x 60007 AND - AND
2 x 60006 AND Banco - AND Bench

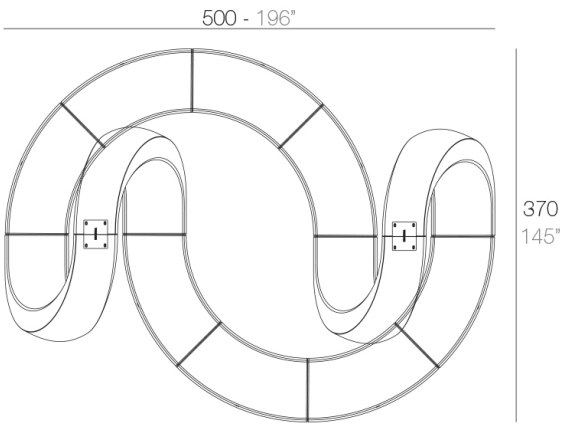

2 x 60007 AND - AND
8 x 60006 AND Banco - AND Bench

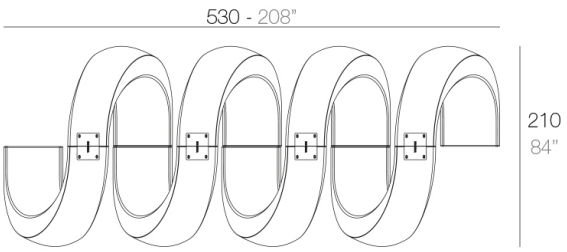

4 x 60007 AND - AND

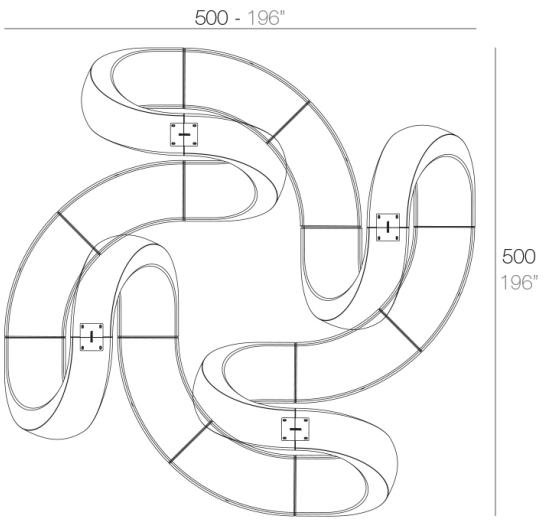

4 x 60007 AND - AND
8 x 60006 AND Banco - AND Bench

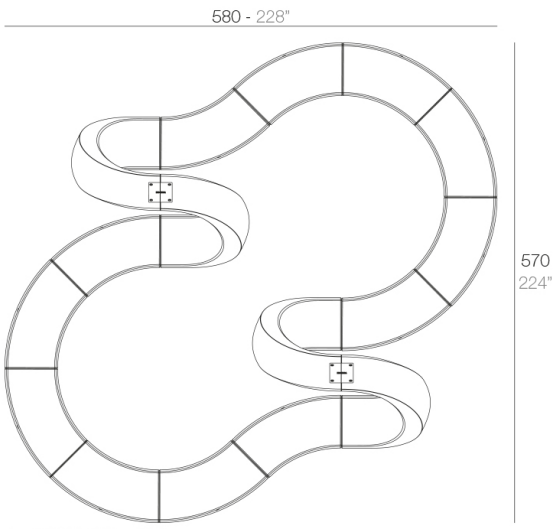

2 x 60007 AND - AND
12 x 60006 AND Banco - AND Bench

Finishes

finishes

Basic
Ref. 60007

white 2001


black 2002


ecru 2003


tortora 2004


gray 2005


anthracite 2006


brown 2008

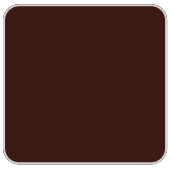
garnet 2015

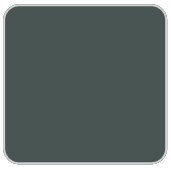
green 2016

cream 2017


blue 2018

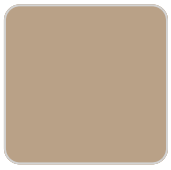
camel 2020


clay 2022

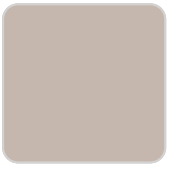
ecru granite

cream granite

ice 2101

Matt Polyethylene

Lacquered
Ref. 60007F

white 3101


black 3102


ecru 3103


tortora 3104

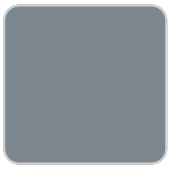
gray 3105


anthracite 3106


garnet 3113


green 3116

cream 3117


blue 3118


brown 3125

Lacquered Polyethylene

lighting

Led – White
Ref. 60007W

ice 2101

White internally lit unit with LED technology. Available only in matte ice white finish.

LED RGBW – Cable
Ref. 60007L

ice 2101

Unit with internal lighting with RGBW LED technology and remote control unit for switching colors. Available only in matte ice white finish. Remote control included.

LED RGBW DMX – Cable
Ref. 60007D

ice 2101

Unit with internal lighting with RGBW LED technology and remote control unit for switching colors. Also controlLED by DMX-1024 (wireless), enabling communication between one or more products simultaneously via the DMX transmitter (not included). There are two options to choose from: Professional XLR DMX and Home WIFI DMX. (Remote control included).
Optional battery

LED RGBW – Battery
Ref. 60007Y

ice 2101

Unit with internal lighting with battery-powered RGBW LED technology. Includes charger and remote control for switching colors and charger. Available only in matte ice white finish.
LED RGBW DMX – Battery

Ref. 60007DY

ice 2101

Unit with internal lighting with RGBW LED technology and remote control unit for switching colors. Also controlLED by DMX-1024 (wireless), enabling communication between one or more products simultaneously via the DMX transmitter (not included). There are two options to choose from: Professional XLR DMX and Home WIFI DMX. (Remote control included).

fabric

BAIONA
Ref. 60007CO



ocean 10111 baiona



tortora 10102 baiona



jade 10109 baiona



white 10100 baiona



green 10110 baiona



ecru 10101 baiona



brown 10108 baiona



garnet 10107 baiona



clay 10106 baiona



black 10114 baiona



camel 10104 baiona



gray 10113 baiona



cream 10103 baiona



blue 10112 baiona

Group 1C. High density 100% acrylic fabric, which provides a solid feel. It has an irregular pattern that adds a handcrafted touch.
CALELLA
Ref. 60007CO


tortora 10122 calella


mustard 10124 calella


ecru 10121 calella


cream 10123 calella


anthracite 10129 calella


white 10120 calella


gray 10128 calella


blue 10127 calella


jade 10126 calella


clay 10125 calella

Group 1C. PFAS-free 100% acrylic fabric with a rich and unusual texture and an exceptional sofness, which enhances the comfort of the furniture.

FISTERRA
Ref. 60007CO


cream 10132 fisterra


white 10130 fisterra


ecru 10131 fisterra


tortora 10135 fisterra


camel 10134 fisterra


peach 10146 fisterra


clay 10137 fisterra


brown 10136 fisterra


olive 10145 fisterra


jade 10139 fisterra


green 10140 fisterra


ocean 10141 fisterra


blue 10142 fisterra


gray 10143 fisterra


anthracite 10144 fisterra


black 10147 fisterra

Group 1C. 100% acrylic fabric, with a distintive irregular marbled pattern and a soft feel.

PORTONOVO
Ref. 60007CO


brown 10158 portonovo


white 10150 portonovo


green 10160 portonovo


tortora 10152 portonovo


garnet 10157 portonovo


jade 10159 portonovo


black 10165 portonovo


ecru 10151 portonovo


anthracite 10164 portonovo


clay 10156 portonovo


gray 10163 portonovo


mustard 10155 portonovo


blue 10162 portonovo


camel 10154 portonovo


ocean 10161 portonovo


cream 10153 portonovo

Group 1A. 100% acrylic fabric, with a flat and simple design, which adapts to any decorative style.

ALTEA
Ref. 60007CO


tortora 1102 altea


white 1100 altea


camel 1120 altea


clay 1122 altea


garnet 1106 altea


brown 1104 altea


jade 1125 altea


ocean 1123 altea


gray 1101 altea


anthracite 1124 altea


black 1105 altea

Group 1A. Soft outdoor fabric with leather-like texture.

AROUSA
Ref. 60007CO


tortora 1209 arousa


camel 1230 arousa


clay 1231 arousa


brown 1214 arousa

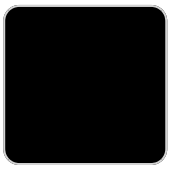
jade 1235 arousa


gray 1208 arousa


anthracite 1210 arousa

Group 1B. Soft outdoor fabric with shiny finish.

Ambients




