Hamptons chaiselongue right section

by Ramón Esteve

Hamptons, the **new collection of designer outdoor furniture** consists of a set of pieces where a careful selection of fabrics and patterns evoke that “lifestyle” where elegance is perceived in the finest details.



VONDOM

Info

Description

Ramón Esteve has designed an elegant modular sofa with a solid aluminium structure, teak details and polished aluminium legs. Its upholstery, devised for outdoor use,

combines weather resistance with the comfort of an indoor fabric.
Available in a varied colour palette, it is versatile to suit both outdoor and indoor spaces.

Weight: 24.14 Kg

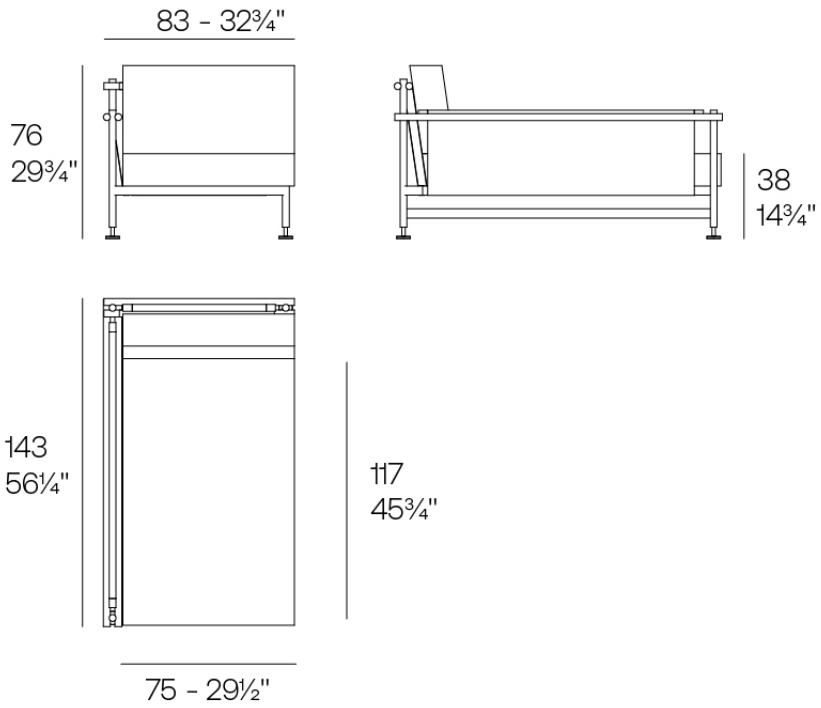

HAMPTONS Chaiselongue Módulo Derecho
HAMPTONS Chaiselongue Right Section

VONDOM

Finishes

finishes

ALUMINIUM
Ref. 54805


white


smoked


ecru


tortora


cream


garnet


brown


green


blue


gray


anthracite


black

Lacquered aluminium profile.

fabric

GETARIA
Ref. 54805TEL







green 10053 getaria

aphrodite 10013 getaria

aquamarine 10003 getaria

Premium high density 100% acrylic fabric, available in a wide range of colors.

BAIONA
Ref. 54805CO


black 10114 baiona


camel 10104 baiona


gray 10113 baiona


cream 10103 baiona


blue 10112 baiona

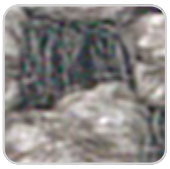
tortora 10102 baiona


ocean 10111 baiona


ecru 10101 baiona


green 10110 baiona


white 10100 baiona


jade 10109 baiona


brown 10108 baiona


garnet 10107 baiona


clay 10106 baiona

High density 100% acrylic fabric, which provides a solid feel. It has an irregular pattern that adds a handcrafted touch.

CALELLA
Ref. 54805CO


blue 10127 calella


jade 10126 calella


clay 10125 calella


mustard 10124 calella


cream 10123 calella


tortora 10122 calella

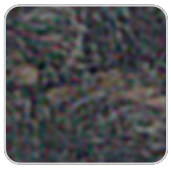
anthracite 10129 calella


ecru 10121 calella


white 10120 calella


gray 10128 calella

PFAS-free 100% acrylic fabric with a rich and unusual texture and an exceptional sofness, which enhances the comfort of the furniture.

FISTERRA
Ref. 54805CO


cream 10132 fisterra


white 10130 fisterra


ecru 10131 fisterra


tortora 10135 fisterra


camel 10134 fisterra

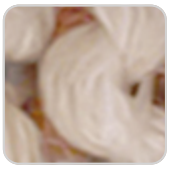
peach 10146 fisterra


clay 10137 fisterra


garnet 10138 fisterra


brown 10136 fisterra


olive 10145 fisterra


jade 10139 fisterra


green 10140 fisterra


ocean 10141 fisterra


blue 10142 fisterra


gray 10143 fisterra


anthracite 10144 fisterra


black 10147 fisterra

100% acrylic fabric, with a distintive irregular marbled pattern and a soft feel.

PORTONOVO
Ref. 54805CO


clay 10156 portonovo


anthracite 10164 portonovo


mustard 10155 portonovo


gray 10163 portonovo


camel 10154 portonovo


blue 10162 portonovo


cream 10153 portonovo


ocean 10161 portonovo


tortora 10152 portonovo


green 10160 portonovo


jade 10159 portonovo


ecru 10151 portonovo


brown 10158 portonovo

white 10150 portonovo


garnet 10157 portonovo


black 10165 portonovo

100% acrylic fabric, with a flat and simple design, which adapts to any decorative style.

ALTEA
Ref. 54805CO


tortora 1102 altea

white 1100 altea

ecru 1111 altea

cream 1103 altea


camel 1120 altea


clay 1122 altea


garnet 1106 altea


brown 1104 altea


jade 1125 altea


ocean 1123 altea


blue 1114 altea


gray 1101 altea


anthracite 1124 altea


black 1105 altea

Soft outdoor fabric with leather-like texture.

AROUSA
Ref. 54805CO


ecru 1221 arousa

white 1219 arousa


tortora 1209 arousa

cream 1220 arousa


camel 1230 arousa


clay 1231 arousa


garnet 1223 arousa


brown 1214 arousa

jade 1235 arousa


blue 1222 arousa


gray 1208 arousa


anthracite 1210 arousa

Soft outdoor fabric with shiny finish.

Ambients



