Pasadena lounge chair

by Jean-Marie Massaud

‘The ambition of Pasadena is to reinterpret an archetype, to make an architectural product with this language and proportions, but generous in terms of comfort’. The complicity between Jean-Marie Massaud and Vondom beats strongly in Pasadena, a proposal that combines serenity and warmth. The result can be seen at a glance: soft profiles, balanced proportions and a comfort that invites you to let go from the very first moment.



VONDOM

Info

Description

Weight: 30 Kg

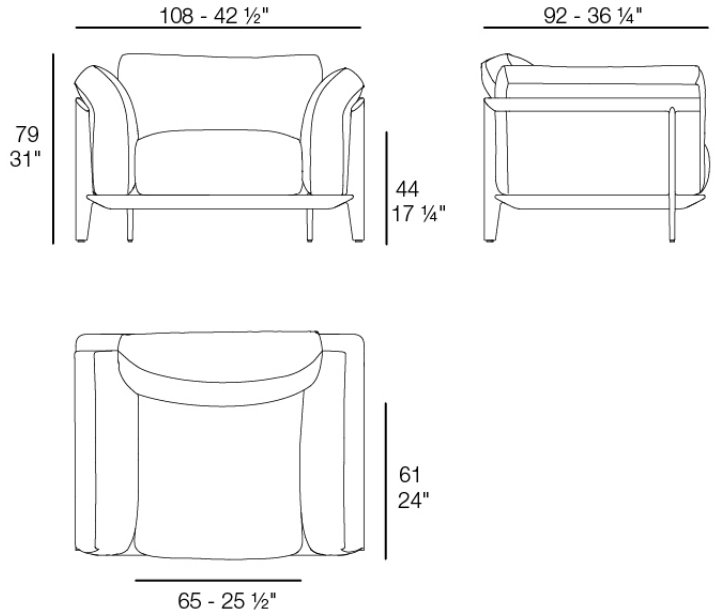

PASADENA Butaca
PASADENA Armchair
Ref. 70050

Combinations

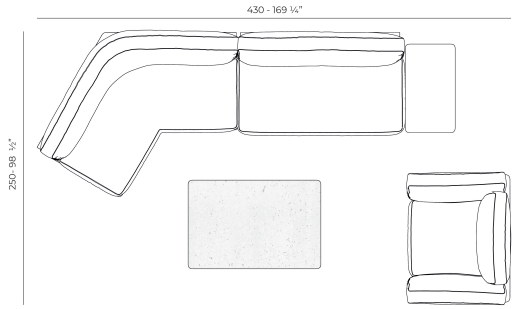

1 x 70071 Sofá Módulo Esquina 60º- Sectional Sofa Corner 60º
1 x 70055 Sofá Módulo Central- Sectional Sofa Central
1 x 70050 Butaca - Armchair
1 x 70065 Mesa Centro 120 x 80 - Low Table 47 ¼ x 31 ½"

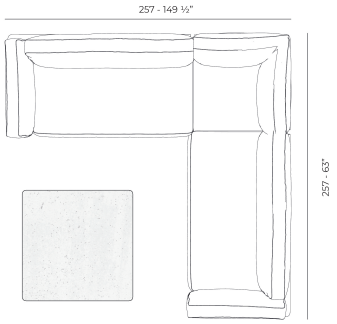

1 x 70053 Sofá Módulo Brazo Derecho XL - Sectional Sofa Right XL
1 x 70054 Sofá Módulo Brazo Izquierdo XL - Sectional Sofa Left XL
1 x 70070 Sofá Módulo Esquina - Sectional Sofa Corner
1 x 70064 Mesa Centro 100 x 100 - Low Table 39 ¼ x 39 ½"

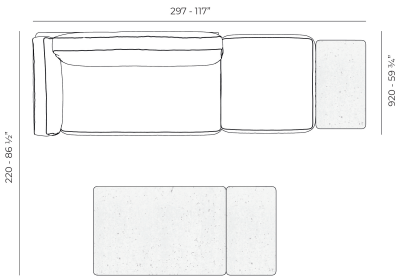

1 x 70053 Sofá Módulo Brazo Derecho XL - Sectional Sofa Right XL
1 x 70072 Sofá Módulo Puff- Sectional Sofa Puff
2 x 70073 Mesa Centro 80 x 45 - Low Table 31 ½ x 17 ¾"
1 x 70065 Mesa Centro 120 x 80 - Low Table 47 ¼ x 31 ½"

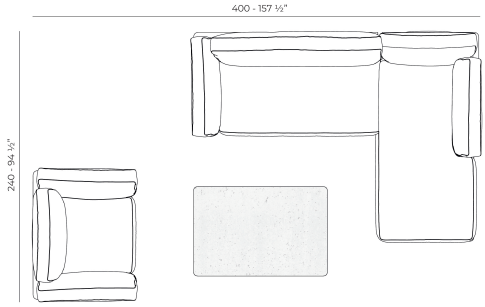

1 x 70050 Butaca - Armchair
1 x 70053 Sofá Módulo Brazo Derecho XL - Sectional Sofa Right XL
1 x 70059 Sofá Módulo Chaiselonge Izquierda - Sectional Sofa Chaiselonge Left
1 x 70065 Mesa Centro 120 x 80 - Low Table 47 ¼ x 31 ½"

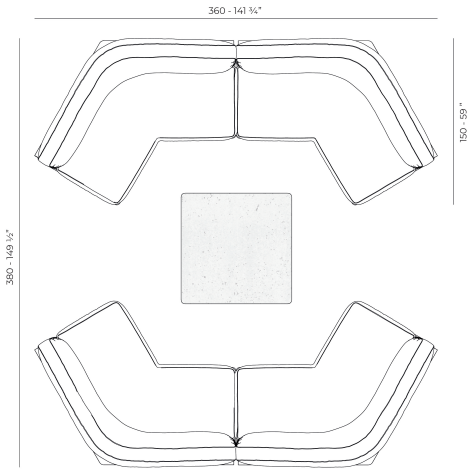

4 x 70071 Sofá Módulo Esquina 60º- Sectional Sofa Corner 60º
1 x 70064 Mesa Centro 100 x 100 - Low Table 39 ¼ x 39 ½"

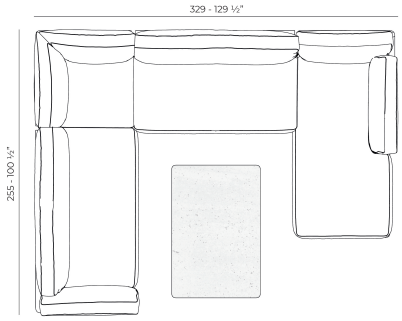

1 x 70055 Sofá Módulo Central- Sectional Sofa Central
1 x 70053 Sofá Módulo Brazo Derecho XL - Sectional Sofa Right XL
1 x 70059 Sofá Módulo Chaiselonge Izquierda - Sectional Sofa Chaiselonge Left
1 x 70065 Mesa Módulo Centro 120 x 80 - Low Table 47 ¼ x 31 ½"
1 x 70070 Sofá Módulo Esquina - Sectional Sofa Corner

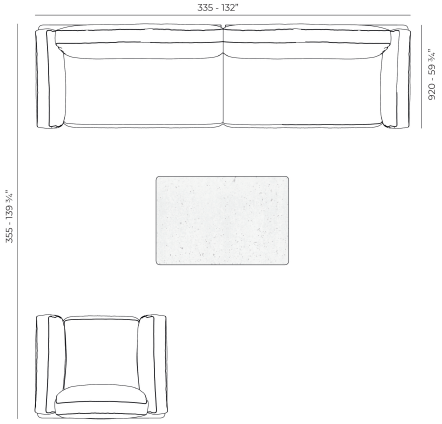

1 x 70053 Sofá Módulo Brazo Derecho XL - Sectional Sofa Right XL
1 x 70054 Sofá Módulo Brazo Izquierdo XL - Sectional Sofa Left XL
1 x 70050 Butaca - Armchair
1 x 70065 Mesa Centro 120 x 80 - Low Table 47 ¼ x 31 ½"

VONDOM

Finishes

finishes

ALUMINIUM
Ref. 70050


white


ecru


smoked


tortora


cream


camel


clay


garnet


brown


green


blue


gray


anthracite


black


ocean

Lacquered aluminium profile.

fabric

GETARIA
Ref. 70050CO











tortora 10048 getaria



terra 10039 getaria



granite 10008 getaria



cream 10047 getaria



iceberg 10037 getaria



oasis 10007 getaria



garnet 10046 getaria



camel 10033 getaria



pearl 10006 getaria



black 10044 getaria



gallant 10025 getaria

oversea 10002 getaria

anthracite 10043 getaria

blue 10024 getaria

ocean 10023 getaria

gray 10042 getaria



emerald 10016 getaria



white 10041 getaria



niord 10015 getaria



brown 10050 getaria



moon 10040 getaria



dune 10009 getaria



Group 2. Premium high density 100% acrylic fabric, available in a wide range of colors.

BAIONA
Ref. 70050CO

garnet 10107 baiona



clay 10106 baiona



black 10114 baiona



camel 10104 baiona



gray 10113 baiona



cream 10103 baiona



blue 10112 baiona



tortora 10102 baiona



ocean 10111 baiona



ecru 10101 baiona




green 10110 baiona


white 10100 baiona


jade 10109 baiona


brown 10108 baiona

Group 1C. High density 100% acrylic fabric, which provides a solid feel. It has an irregular pattern that adds a handcrafted touch.

CALELLA
Ref. 70050CO


gray 10128 calella


white 10120 calella


blue 10127 calella


jade 10126 calella


clay 10125 calella


mustard 10124 calella


cream 10123 calella


tortora 10122 calella


anthracite 10129 calella


ecru 10121 calella

Group 1C. PFAS-free 100% acrylic fabric with a rich and unusual texture and an exceptional sofness, which enhances the comfort of the furniture.

FISTERRA
Ref. 70050CO


cream 10132 fisterra


white 10130 fisterra


ecru 10131 fisterra


tortora 10135 fisterra


camel 10134 fisterra


mustard 10133 fisterra


peach 10146 fisterra


clay 10137 fisterra


garnet 10138 fisterra


brown 10136 fisterra


olive 10145 fisterra


jade 10139 fisterra


green 10140 fisterra


ocean 10141 fisterra


blue 10142 fisterra


gray 10143 fisterra


anthracite 10144 fisterra


black 10147 fisterra

Group 1C. 100% acrylic fabric, with a distintive irregular marbled pattern and a soft feel.

PORTONOVO
Ref. 70050CO


mustard 10155 portonovo


gray 10163 portonovo


camel 10154 portonovo


blue 10162 portonovo


cream 10153 portonovo


ocean 10161 portonovo


tortora 10152 portonovo


green 10160 portonovo


ecru 10151 portonovo


jade 10159 portonovo


brown 10158 portonovo

white 10150 portonovo


garnet 10157 portonovo


black 10165 portonovo


clay 10156 portonovo



anthracite 10164
portonovo

Group 1A. 100% acrylic fabric, with a flat and simple design, which adapts to any decorative style.

LLANES
Ref. 70050CO



anthracite 10183
llanes



gray 10182 llanes



tortora 10181 llanes



crema 10180 llanes

Group 3A.

ZUMAIA
Ref. 70050CO



cream 10201 zumaia



white 10200 zumaia



black 10205 zumaia



green 10204 zumaia



blue 10203 zumaia



garnet 10202 zumaia

Group 2. Elegant 100% acrylic fabric, with a soft terry, pleasant to the touch and a unique color combination.
SUANCES

VONDOM

Ref. 70050CO


blue 10312 suances


cream 10303 suances


ocean 10311 suances


tortora 10302 suances


green 10310 suances


ecru 10301 suances


olive 10317 suances


jade 10309 suances


white 10300 suances


peach 10316 suances


brown 10308 suances


black 10315 suances


garnet 10307 suances


clay 10306 suances


anthracite 10314 suances


mustard 10305 suances


gray 10313 suances


camel 10304 suances

Group 2. Bocle fabric, which stands out for its warmth and softness, with matching colors that add depth and elegance.

RIBADEO
Ref. 70050CO


tortora 10322 ribadeo


green 10330 ribadeo


ecru 10321 ribadeo


jade 10329 ribadeo


mint 10337 ribadeo



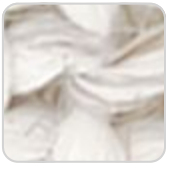







brown 10328 ribadeo



white 10320 ribadeo



olive 10336 ribadeo



garnet 10327 ribadeo



peach 10335 ribadeo



clay 10326 ribadeo



anthracite 10334 ribadeo



mustard 10325 ribadeo



gray 10333 ribadeo

camel 10324 ribadeo

blue 10332 ribadeo

cream 10323 ribadeo

ocean 10331 ribadeo

Group 2. Soft fabric with marbled yarns of different thicknesses that create a rich and visually intreresting texture.Its Linen look adds a touch of natural style.

LOURO
Ref. 70050CO

green 10350 louro



tortora 10342 louro



jade 10349 louro



brown 10348 louro



olive 10356 louro



garnet 10347 louro



peach 10355 louro



clay 10346 louro



anthracite 10354 louro



mustard 10345 louro



gray 10353 louro



camel 10344 louro



blue 10352 louro



cream 10343 louro



ocean 10351 louro



Group 2. Soft and versatile fabric, which presents a neutral base color that makes it easy to combine with different colors and fabrics.

MORAIRA
Ref. 70050CO

green 10362 moraira

clay 10361 moraira

camel 10360 moraira

ecru 10365 moraira

gray 10364 moraira

blue 10363 moraira

Group 3B.

TEGUISE
Ref. 70050CO

gray 10374 teguise

blue 10373 teguise

green 10372 teguise

clay 10371 teguise

camel 10370 teguise

ecru 10375 teguise

Group 3B.

ROSES
Ref. 70050CO

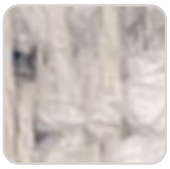
blue 10405 roses


tortora 10404 roses


green 10403 roses


garnet 10402 roses


cream 10400 roses

Group 3A.

ALTEA
Ref. 70050CO


tortora 1102 altea

white 1100 altea


camel 1120 altea


clay 1122 altea


garnet 1106 altea


brown 1104 altea


jade 1125 altea


ocean 1123 altea


gray 1101 altea


anthracite 1124 altea


black 1105 altea

Group 1A. Soft outdoor fabric with leather-like texture.

AROUSA
Ref. 70050CO


tortora 1209 arousa


camel 1230 arousa


clay 1231 arousa


brown 1214 arousa

jade 1235 arousa



gray 1208 arousa



anthracite 1210 arousa

Group 1B. Soft outdoor fabric with shiny finish.

Ambients





